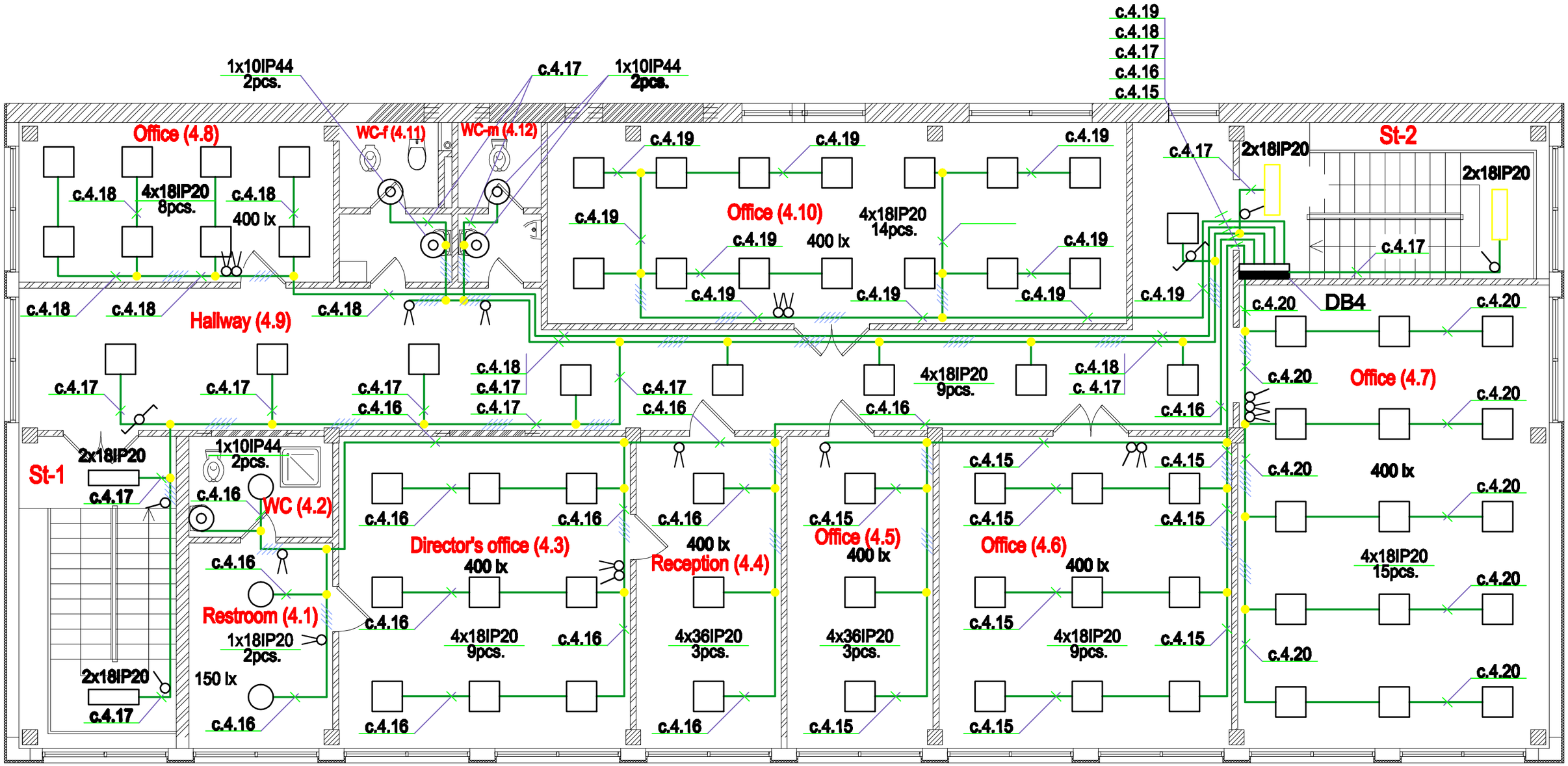
Office (4.8)
4x18IP20
8pcs.
400 lx
Hallway (4.9)
WC-f (4.11)
WC-m (4.12)
1x10IP44
2pcs.
c.4.17
c.4.18
c.4.19
c.4.16
c.4.15
c.4.20
Office (4.10)
4x18IP20
14pcs.
2x18IP20
St-2
DB4
Office (4.7)
4x18IP20
9pcs.
St-1
WC (4.2)
Restroom (4.1)
1x18IP20
2pcs.
150 lx
Director's office (4.3)
Reception (4.4)
4x36IP20
3pcs.
Office (4.5)
Office (4.6)
4x18IP20
15pcs.